# Luna

6713

INSTRUCTION MANUAL

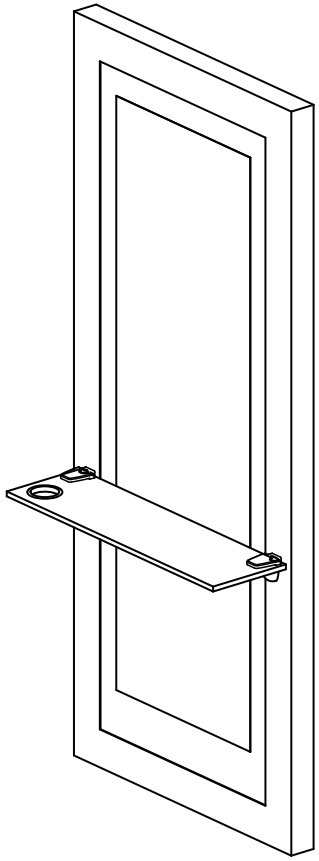

# List of Parts & Tools

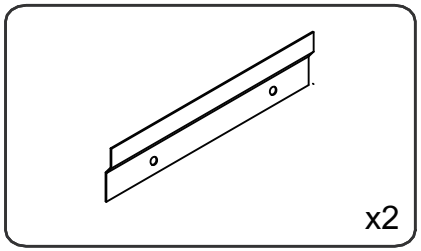


101001

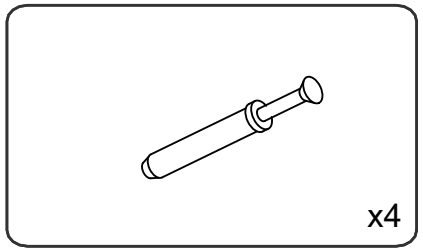


101002

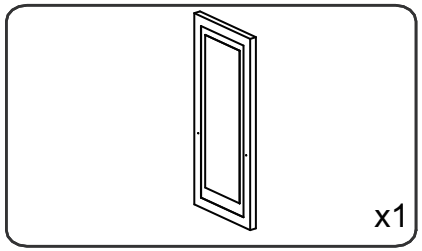


101003

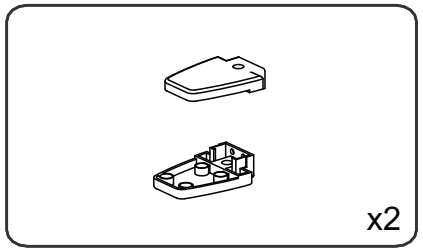


101004

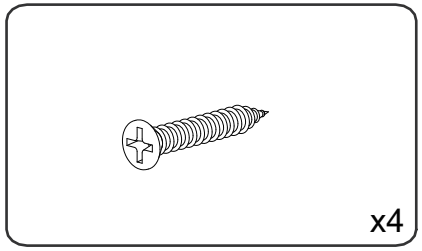


111001

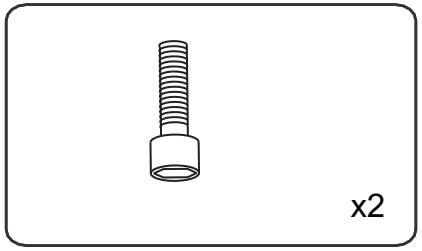


112001

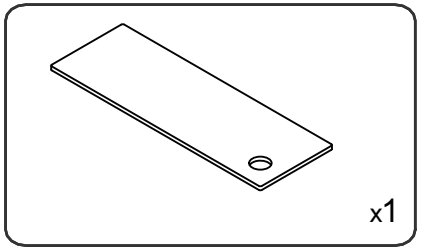


101005

Step 1

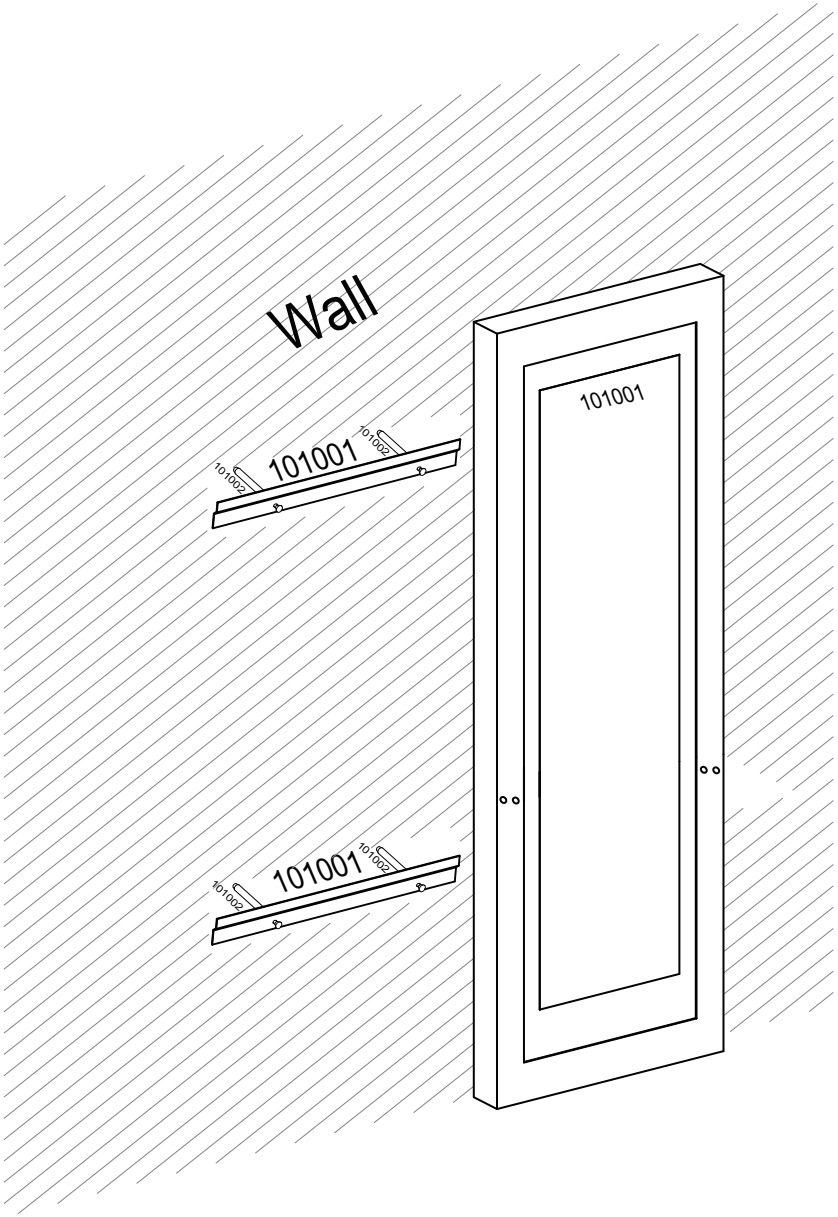


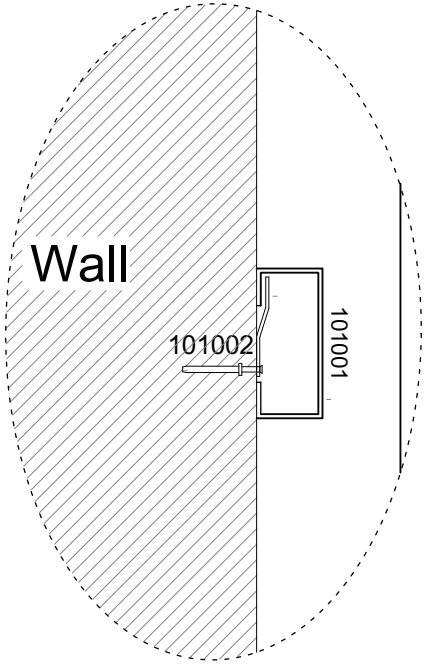


Side view

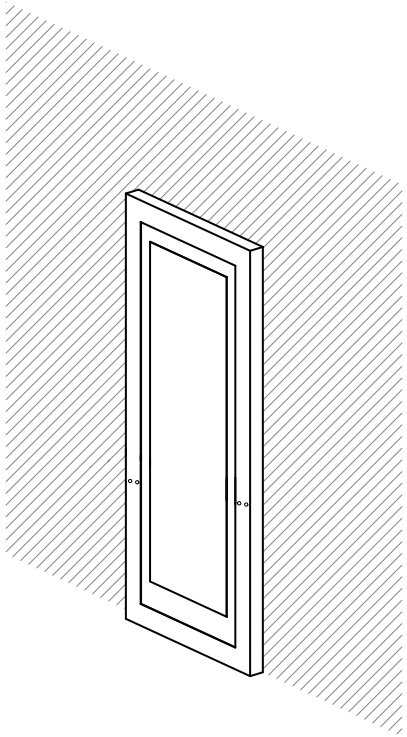

Secure the bracket onto the wall with provided expansion bolts, then secure the mirror onto the metal bracket. Dir's expansion bolts are meant for solid (cement or solid wood) walls, please use appropriate expansion bolts or wall anchors for your mounting needs.
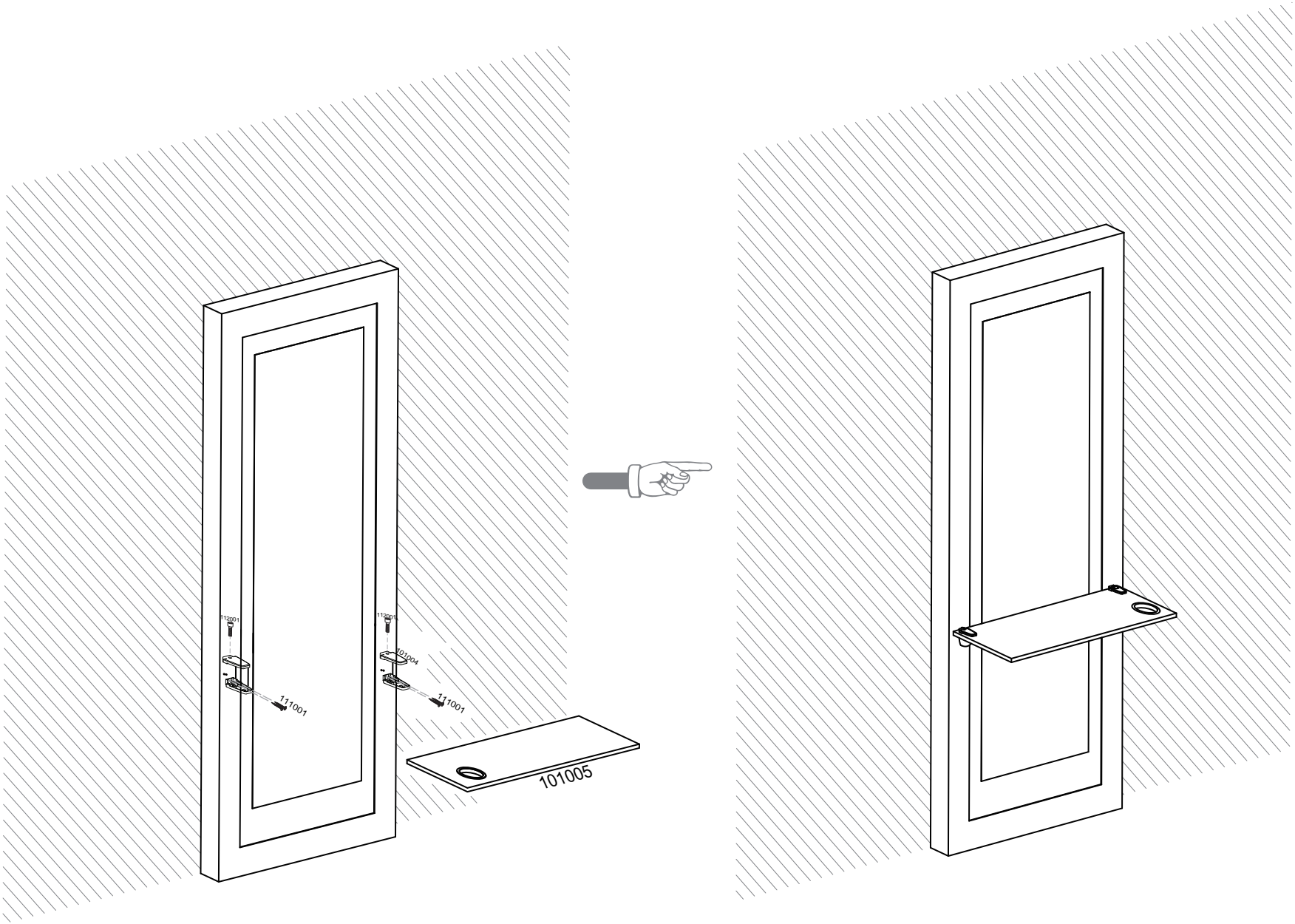
Step 2